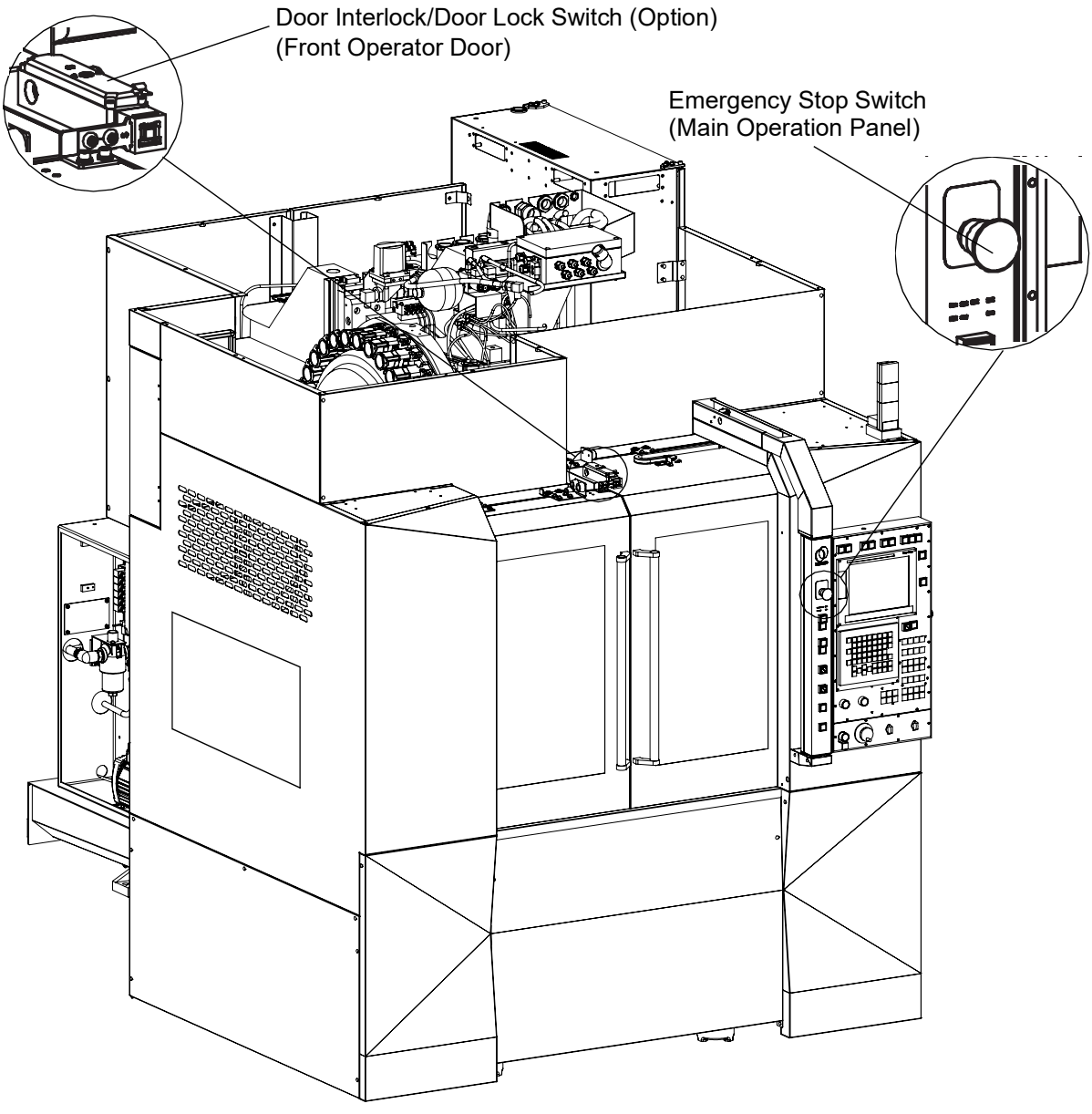
Door Interlock/Door Lock Switch (Option)
(Front Operator Door)
Emergency Stop Switch
(Main Operation Panel)